MICRO-EPSILON

More Precision

optoNCDT // Laser displacement sensors (triangulation)

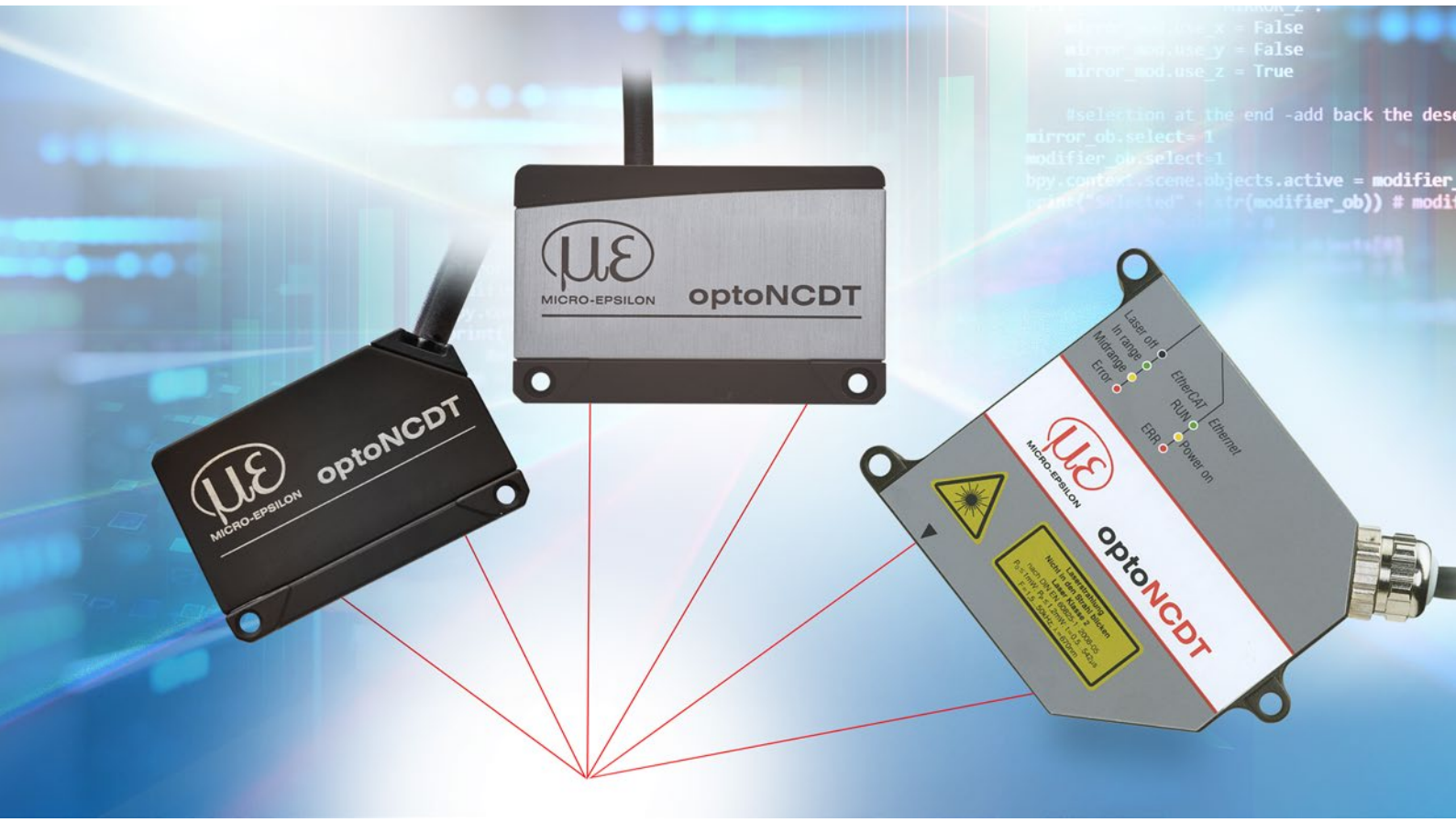

Highly dynamic laser sensors with high precision
optoNCDT 2300

- For common surfaces
- Adjustable measuring rate up to 49.14 kHz
- Analog (U/I) / RS422 / Ethernet / EtherCAT / PROFINET / EtherNet/IP
- Advanced Real Time Surface Compensation
- Resolution 0.03 µm
- For diffuse and reflective surfaces

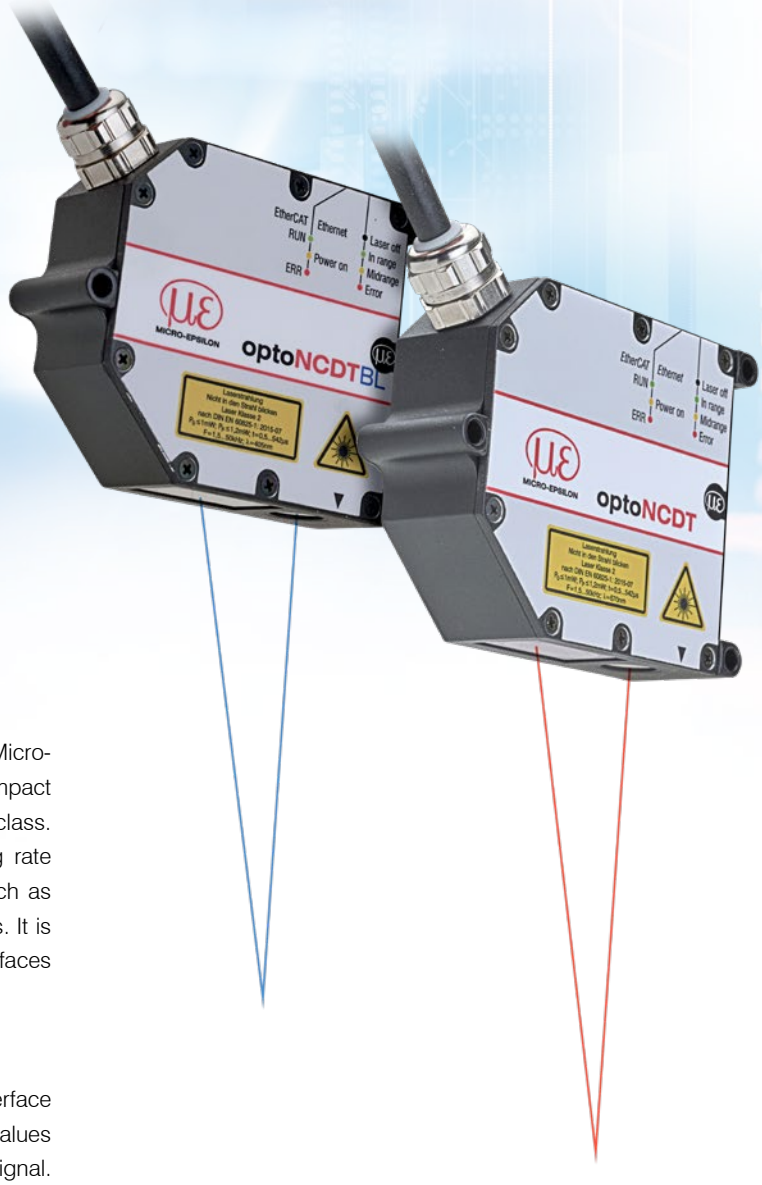

The optoNCDT 2300 sensors form the high-end segment of Micro-Epsilon laser sensors. The entire electronics is integrated in a compact sensor housing which is a worldwide unique feature of this sensor class. The high-precision laser sensor has an adjustable measuring rate of 49.14 kHz and is used for particularly fast applications, such as monitoring vibrations or measurements on challenging surfaces. It is used on diffuse reflective surfaces and for directly reflecting surfaces when equipped with the special alignment feature.

User-friendly web interface for easy operation

The optoNCDT 2300 laser sensors can be operated via a web interface which offers multiple possibilities in order to process measured values and signals, e.g., peak selection, filter and masking of the video signal.

Fast exposure control for demanding surfaces

The new A-RTSC (Advanced Real Time Surface Compensation) feature is a development based on the proven RTSC technology and, with its improved dynamic range, enables more precise real time surface compensation during the measurement process. This means the sensor is not influenced by rapidly changing surface reflections and provides stable measurement results.

Model	Technology	Measuring range	Repeatability	Linearity
optoNCDT 2300		2 - 300 mm	0.03 µm	from 0.02 %
optoNCDT 2300BL		2 - 50 mm	0.03 µm	from 0.02 %
optoNCDT 2300LL		2 - 50 mm	0.1 µm	from 0.02 %
optoNCDT 2300-2DR		2 mm	0.03 µm	from 0.03 %
optoNCDT 2310		10 - 50 mm	0.5 µm	from 0.03 %

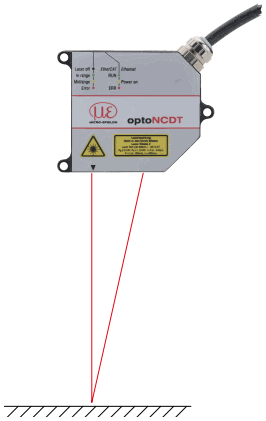

Distance measurement on diffuse reflecting surfaces

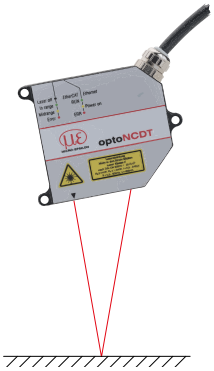

Distance measurement on directly reflecting surfaces

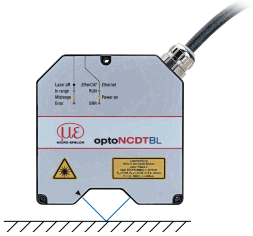

High precision distance measurement on directly reflecting surfaces

Versatile use

The optoNCDT 2300 sensors can be operated in several measurement modes: in standard mode for distance measurement on diffusely reflecting materials. In addition, the sensors can be used for distance measurement on reflective and shiny surfaces (direct reflection).

Application examples

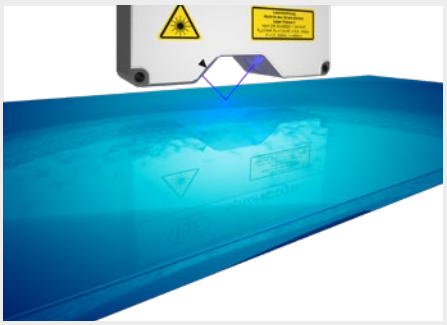

Distance measurement of coated glass

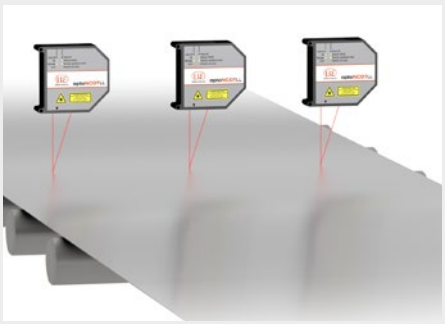

Planarity testing of metal strips

Testing the radial run out of rollers

Laser-Point - optoNCDT 2310

Model		ILD2310-10	ILD2310-20	ILD2310-40	ILD2310-50
Measuring range [1]		10 (5) mm	20 (10) mm	40 (20) mm	50 (25) mm
Start of measuring range [1]		95 (100) mm	90 (100) mm	175 (195) mm	550 (575) mm
Mid of measuring range [1]		100 (102.5) mm	100 (105) mm	195 (205) mm	575 (587.5) mm
End of measuring range [1]		105 (105) mm	110 (110) mm	215 (215) mm	600 (600) mm
Linearity [2]		< ±3 µm	< ±6 µm	< ±12 µm	< ±50 µm
		< ±0.03 % FSO	< ±0.03 % FSO	< ±0.03 % FSO	< ±0.1 % FSO
Resolution [3]		0.5 µm	1 µm	2 µm	7.5 µm
Light spot diameter [4]	SMR	400 x 500 µm	200 µm	230 µm	400 … 500 µm
	MMR		60 µm	210 µm	
	EMR		200 µm	230 µm	
Connection		integrated pigtail 0.25 m with 14-pin ODU plug, min. bending radius 30 mm when firmly installed (see accessories for suitable connection cable)			
Material		Aluminum housing			

[1] Value in brackets applies for measuring rate 49.14 kHz
[2] FSO = Full Scale Output
The specified data apply to white, diffuse reflecting surfaces (Micro-Epsilon reference ceramic for ILD sensors)
[3] with 10 kHz, without averaging
[4] ±10 %; SMR = Start of measuring range; MMR = Mid of measuring range; EMR = End of measuring range

optoNCDT 2300 / Measuring ranges 200/300

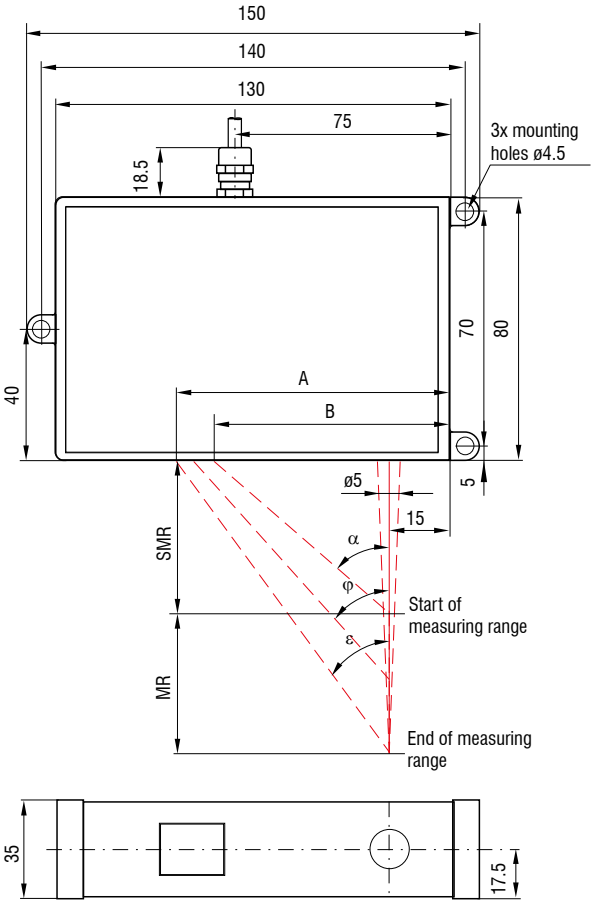

optoNCDT 2300BL / Measuring range 50
optoNCDT 2310 / Measuring range 50

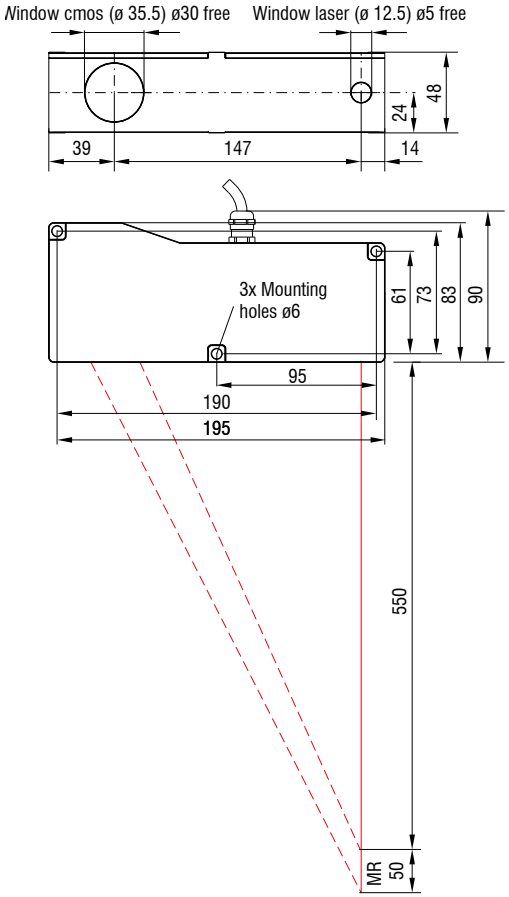

MR	SMR	α	φ	ε	A	B
200	130	25.1 °	16.7 °	13.1 °	91.6	76
300	200	18.3 °	12.2 °	9.6 °	99.4	81

(Dimensions in mm, not to scale)
MR = measuring range; SMR = start of measuring range
MMR = mid of measuring range; EMR = end of measuring range

Connector (sensor side)

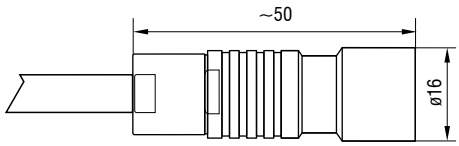

Dimensions
optoNCDT 2300

optoNCDT 2310 / Measuring ranges 10/20/40

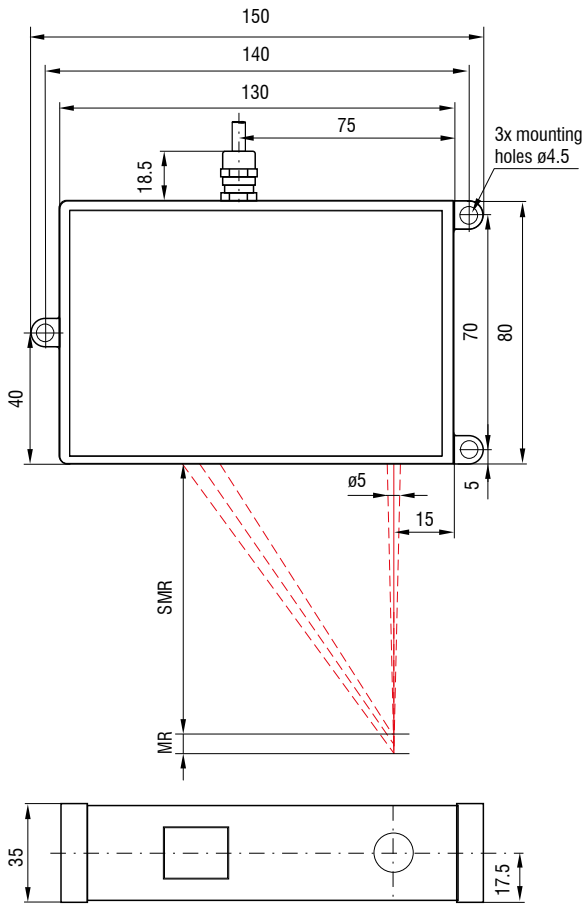

optoNCDT 2300-2DR

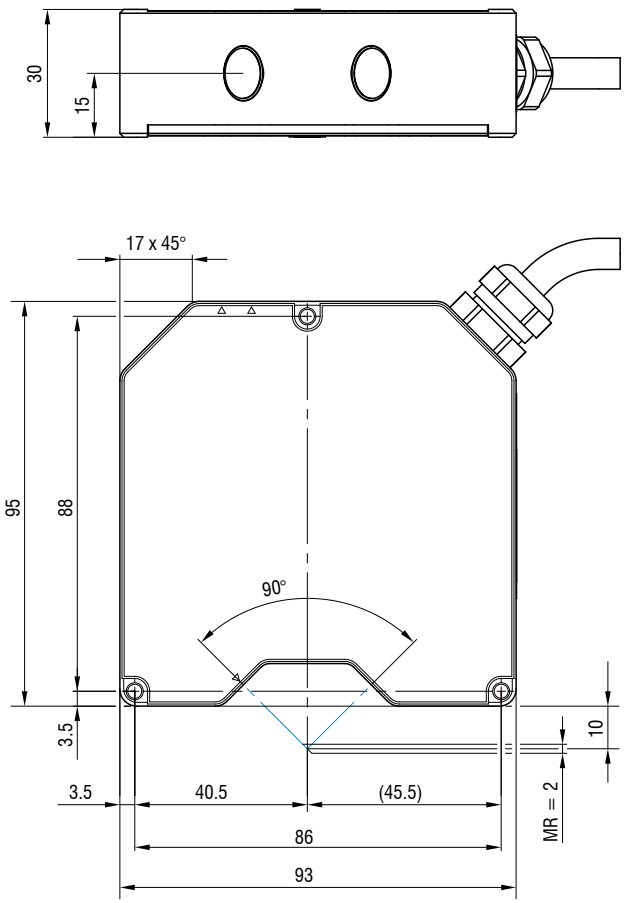

MR	SMR	MMR	EMR
10	95	100	105
20	90	100	110
40	175	195	215

(Dimensions in mm, not to scale)
MR = measuring range; SMR = start of measuring range
MMR = mid of measuring range; EMR = end of measuring range

Connector (sensor side)

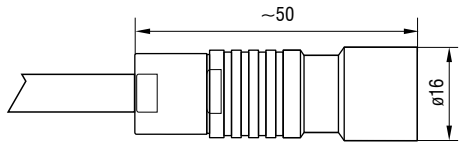

Installation options

Housings M and L

Bolt connection

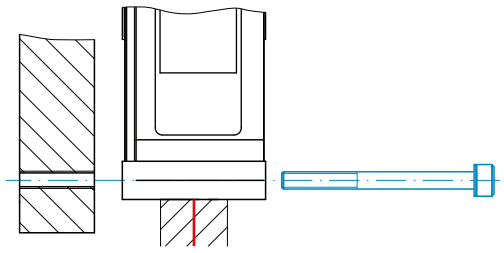

ILD2300-2 … ILD2300-100 ILD2300BL / ILD2300LL	**M4**
ILD2300-200 / -300 ILD2310-10 / -20 /-40	**M4**
ILD2310-50 ILD2310-50BL	**M5**
ILD2300-2DR	**M3**

Direct fastening

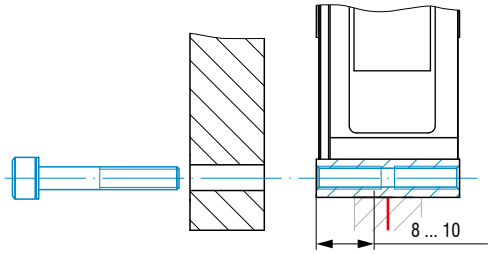

ILD2300-2 … ILD2300-100 ILD2300BL / ILD2300LL	**-**
ILD2300-200 / -300 ILD2310-10 / -20 /-40	**M5**
ILD2310-50 ILD2310-50BL	**M6**
ILD2300-2DR	**M4**

Accessories for optoNCDT 2300/2310

Power supply unit
PS2020 (power supply 24 V / 2.5 A, input 100 - 240 VAC, output 24 VDC / 2.5 A, mounting onto symmetrical standard rail 35 mm x 7.5 mm, DIN 50022)

Mounting plate
for easy alignment of the DR models

Protective housings
see page 60

Scope of supply

- 1 sensor ILD23x0 with 0.25 m connection cable and cable socket
- 2 laser warning signs according to IEC standard
- RJ45 short-circuit plug

Article designation

ILD2300-	6	LL	3R

Laser class
No indication: class 2 (standard)
3R: class 3R (on request)

Laser type
No indication: Red laser point (standard)
LL: Laser Line
BL: Blue Laser
DR: Direct Reflection

Measuring range in mm

Series
ILD2300: Highly dynamic laser sensor in the 50 kHz class
ILD2310: Laser sensors with small measuring range and large offset distance

Connection possibilities
optoNCDT 2300

Drag-chain suitable extension and adapter cables

Cable diameter:	max. 7.5 mm
Drag chain:	ja
Robot:	no
Temperature range:	-40 … 70 °C (moving / not moving)
Bending radius:	> 90 mm (fixed installation / dynamic / drag chain)

Sensor	Cables	Type	Connection possibilities and accessories	
ILD2300-xx ILD2300-xxLL ILD2300-xxBL ILD2300-2DR ILD2310-xx	**Extension cable pigtail** Length 3 m / 6 m / 9 m / 15 m *Art. no.* *Designation* 2901717 PC2300-3/OE 2901760 PC2300-6/OE 2901761 PC2300-9/OE 2901762 PC2300-15/OE	Open ends	**Supply voltage connection** Power supply unit PS2020	
			Interface module of RS422 to USB IF2001/USB	
			Interface module for Industrial Ethernet connection IF2035-PROFINET IF2035-EIP IF2035-EtherCAT	
	Adapter cable for PC interface card Length 3 m / 6 m *Art. no.* *Designation* 2901728 PC2300-3/IF2008 2901729 PC2300-6/IF2008	Sub-D	**Interface card for synchronous data acquisition** IF2008PCIe / IF2008E	
			4-fold interface module from RS422 to USB IF2004/USB	
	Adapter cable for sensor calculation Length 3 m / 6 m / 9 m *Art. no.* *Designation* 29011031 PC2300-3/C-Box/RJ45 29011044 PC2300-6/C-Box/RJ45 29011045 PC2300-9/C-Box/RJ45	Sub-D	**Controller for D/A conversion and evaluation of up to 2 sensor signals** Dual Processing Unit	
	Adapter cable for sensor calculation Length 2 m *Art. no.* *Designation* 29011279 PCE2300-3/M12	M12	**Interface module for Ethernet connection of up to 8 sensors** IF2008/ETH	
	Adapter cable Sub-D for EtherCAT Length 3 m / 6 m *Art. no.* *Designation* 2901661 PC2300-3/SUB-D 2901976 PC2300-6/SUB-D	Sub-D	**Signal output Ethernet, EtherCAT, RS422 to PC or PLC** PC2300-0,5Y Connection cable ILD2300	

Connection cable for high temperature

Cable diameter:	max. 7.5 mm
Drag chain:	no
Robot:	no
Temperature range:	-55 … 250 °C (moving)
	-90 … 250 °C (not moving)
Bending radius:	> 40 mm (fixed installation)
	> 75 mm (dynamic)

Sensor	Cables	Type	Connection possibilities and accessories	
ILD2300-xx ILD2300-xxLL ILD2300-xxBL ILD2300-2DR ILD2310-xx	**Connection cable high temperatures** Length 3 m / 6 m / 9 m / 15 m *Art. no.* / *Designation* 29011118 PC2300-3/OE/HT 29011119 PC2300-6/OE/HT 29011095 PC2300-9/OE/HT 29011120 PC2300-15/OE/HT	Open ends	**Connection supply voltage** PS2020	
			Interface module of RS422 to USB IF2001/USB	
			Interface module for Industrial Ethernet connection IF2035-PROFINET IF2035-EIP IF2035-EtherCAT	

Connection cable for EtherCAT operation

Cable diameter:	max. 7.5 mm
Drag chain:	yes
Robot:	no
Temperature range:	-40 … 70 °C (moving / not moving)
Bending radius:	> 90 mm (fixed installation / dynamic / drag chain)

Input	Cables	Type	Connection possibilities and accessories	
Sub-D (PC2300-x/ Sub-D)	**Adapter cable for EtherCAT** Length 0.5 m *Art. no.* / *Designation* 2901693 PC2300-0,5Y Connection cable ILD2300 	Open ends & RJ45	**Signal output EtherCAT & Ethernet**	
			Supply voltage connection Power supply unit PS2020	
			Interface module of RS422 to USB IF2001/USB	

Protective housings for demanding environments
optoNCDT

SGH & SGHF models				SGHF-HT model
Protective housing Size S		Protective housing Size M		
SGH	SGHF	SGH	SGHF	
(140 x 140 x 71 mm)		(180 x 140 x 71 mm)		(260 x 180 x 154 mm)
Water-resistant housing protects the sensor from solvents and detergents.	Ideal with high ambient temperatures. The integrated air cooling of the housing offers optimum protection for the sensor.	Water-resistant housing protects the sensor from solvents and detergents.	Ideal with high ambient temperatures. The integrated air cooling of the housing offers optimum protection for the sensor.	Water-cooled protective housing with window and compressed-air connection for measurement tasks in ambient temperatures up to 200 °C. Maximum temperature of cooling water T(max) = 10 °C Minimum water flow rate Q(min) = 3 liters/min
Size S suitable for		Size M suitable for		Suitable for
ILD1750-20BL		ILD1750-500BL		ILD1750-500BL
ILD1750-200BL		ILD1750-750BL		ILD1750-750BL
ILD2300-2 / -2LL / -2BL		ILD2300-200		ILD2300-200
ILD2300-5 / -5BL		ILD2300-300		ILD2300-300
ILD2300-10 / -10LL / -10BL		ILD2310-10		ILD2310-10
ILD2300-20 / -20LL		ILD2310-20		ILD2310-20
ILD2300-50 / -50LL		ILD2310-40		ILD2310-40
ILD2300-100				ILD2310-50BL

Protective housing SGHF ILD1900
 Compact protective housing which is simply attached to the sensor. The protective housing has an air purge for cleaning the protective windows. It also cools the sensor.
Suitable for
ILD1900-6 / -6LL
ILD1900-10 / -10LL
ILD1900-25 / -25LL
ILD1900-50 / -50LL
ILD1900-100
ILD1900-200
ILD1900-500

sensorTOOL

The Micro-Epsilon sensorTOOL is a powerful software that is used to operate one or more optoNCDT sensors. The sensorTOOL can be used to access the sensor connected to the PC, display its complete data stream and save it in a file (in Excel-compatible CSV format). The sensor is configured via its web interface.

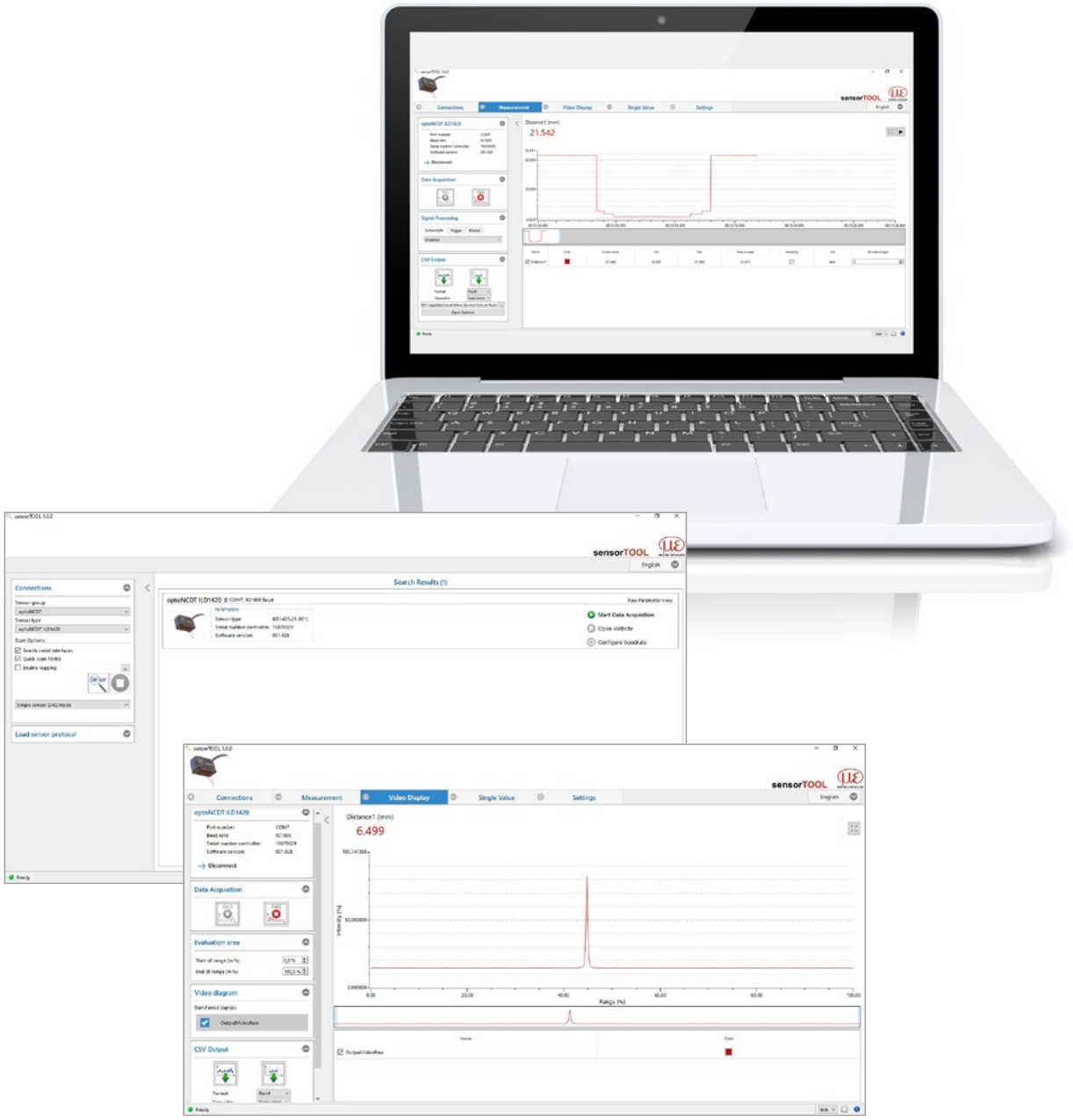

Free download

All software tools, drivers and documented driver DLL for easy integration of the sensors into existing or internally-generated software are available free of charge under www.micro-epsilon.de/download

Sensors and Systems from Micro-Epsilon

Sensors and systems for displacement, distance and position

Sensors and measurement devices for non-contact temperature measurement

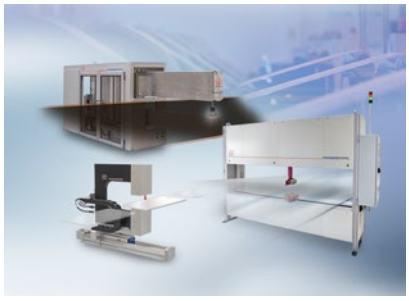

Measuring and inspection systems for metal strips, plastics and rubber

Optical micrometers and fiber optics, measuring and test amplifiers

Color recognition sensors, LED analyzers and inline color spectrometers

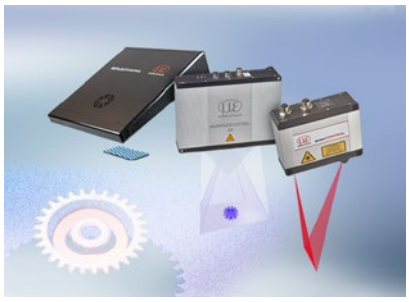

3D measurement technology for dimensional testing and surface inspection

Modifications reserved / Y9761188-N092066GKE

MICRO-EPSILON

MICRO-EPSILON Headquarters
Koenigbacher Str. 15 · 94496 Ortenburg / Germany
Tel. +49 (0) 8542 / 168-0 · Fax +49 (0) 8542 / 168-90
info@micro-epsilon.com · **www.micro-epsilon.com**