MICRO-EPSILON

More Precision

optoCONTROL CLS-K // Fiber optic sensors

optoCONTROL CLS-K

Features:

- Scanning distance up to 180mm*
- Range of up to 2m*

  * depending on the fiber bundle diameter
- Switching output: NPN, PNP, optocoupler, relay (depending on the version)
- Adjustable drop-out delay 5-100ms (optional)

Applications:

- Test & measurement tasks
- Position recognition of small parts
- Position and assembly monitoring on automatic assembly machines and feeding systems
- Presence monitoring
- Checking length and diameter

Advantages:

- Precise and reliable object detection
- Low drift due to transmission monitoring, making it particularly suitable for measuring tasks
- High switching frequency and short response time
- Sensor monitoring via analog signal
- Stable long-term behavior by monitoring and regulating the emission of the transmitter diode

Type CLS-K	10	11	20	30	31	40	50	51
Order No.	10010023	10010024	10040025	10040027	10020028	10040029	10040030	10040031
Operating voltage VDC	10-30	10-30	24	10-30	10-30	24	10-30	10-30
Residual ripple	≤10%							
Current consumption	~ 50mA							
Switching delay	≤ 500ms							
Response time	≤ 120µs							
Temperature drift	≤ (-)0.5% /K							
Reproducibility	≤ 1% with Δϑ = 2K							
Switching state	LED display red and green							
Operating mode	light and dark switch output		switchable light/dark switching					
Sensitivity	adjustable via 10-level potentiometer P1							
Range switching	1:100 (Short range : Long range)							
Hysteresis	4 % of the measuring range							
Protection class	IP65 (with mounted optical fiber)							
Operating temperature	0°C to +50°C							
Storage temperature	-25°C to +70°C							
Housing material	Makrolon® 8035/UL94V1, transparent cover, black lower part							
Weight, Dimensions	approx. 215g/135g, 125x42x45mm							
Switching output (*short-circuit protected)	Transistor* 2x NPN O.C.		Relays 1x changeover contact	Optocoupler*	PNP*	Relays 1x changeover contact	Optocoupler*	PNP*
Switching voltage	30VDC		0.01-250VAC 0.01-220VDC	30VDC	30VDC	0.01-250VAC 0.01-220VDC	30VDC	30VDC
Switching current	5-100mA		50µA-2 A	5-100mA	5-100mA	50µA-2 A	5-100mA	5-100mA
Switching power			5 µW-60W 125VA			5 µW-60W 125VA		
Max. switching frequency	4kHz		60Hz	4kHz	4kHz	60Hz	4kHz	4kHz
Saturation voltage	≤ 2.0V			≤ 2.0V	≤ 2.0V		≤ 2.0V	≤ 2.0V
Pulse stretching 5-100ms						adjustable with potentiometer P2		
Analog output	0.1-5 VDC, output resistance 1kOhm							
Type of connection	2m cable	screw clamps 1.5mm²			connector	screw clamps 1.5mm²		

Dimensions in mm, not to scale

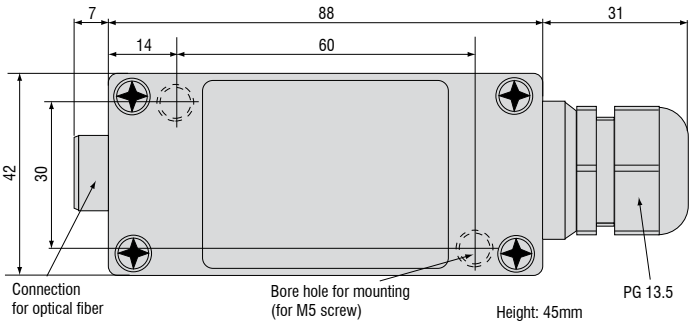

Control and display interface

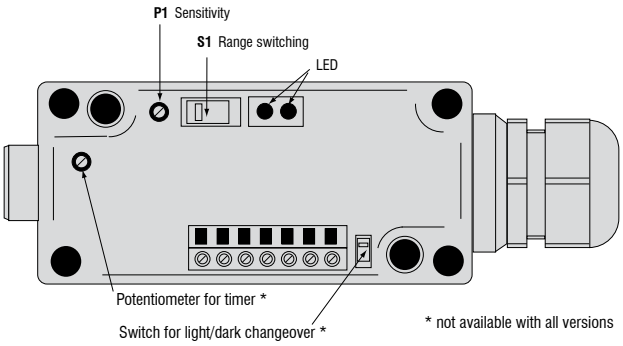

* not available with all versions

Connections:

Terminal block

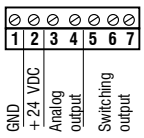

Output:
CLS-K-11: NPN O.C.
CLS-K-20/40: Relay
CLS-K-30/50: Optocoupler O.C./O.E
CLS-K-31/51: PNP
All light/dark switches versions

Connection cable

brown — GND
pink — +24 VDC
green — Analog output +
yellow — Analog GND output
grey — NPN-Switching output *1
white — NPN-Switching output *2

Output:
CLS-K-10: NPN O.C.

*1 dark switching
*2 light switching

High performance sensors made by Micro-Epsilon

Sensors and systems for displacement and position

Sensors and measurement devices for non-contact temperature measurement

2D/3D profile sensors (laser scanner)

Optical micrometers, fiber optic sensors and fiber optics

Color recognition sensors, LED analyzers and color online spectrometer

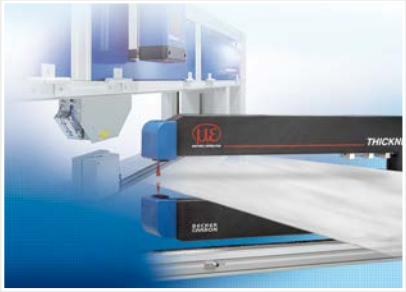

Measurement and inspection systems

MICRO-EPSILON

MICRO-EPSILON Eltrotec GmbH
Heinkelstraße 2 · 73066 Uhingen / Germany
Tel. +49 (0)7161 98872-300 · Fax+49 (0)7161 98872-303
eltrotec@micro-epsilon.de · **www.micro-epsilon.com**